A Practical and Efficient Approach for Correct Z-Pass Stencil Shadow Volumes

Baran Usta Leonardo Scandolo Markus Billeter Ricardo Marroquim Elmar Eisemann

Delft University of Technology

TU Delft Delft University of Technology

Shadow Volumes

- Detect Silhouette Edges
- Extend to the infinity
  - Generating quads
- Volume in between the quads

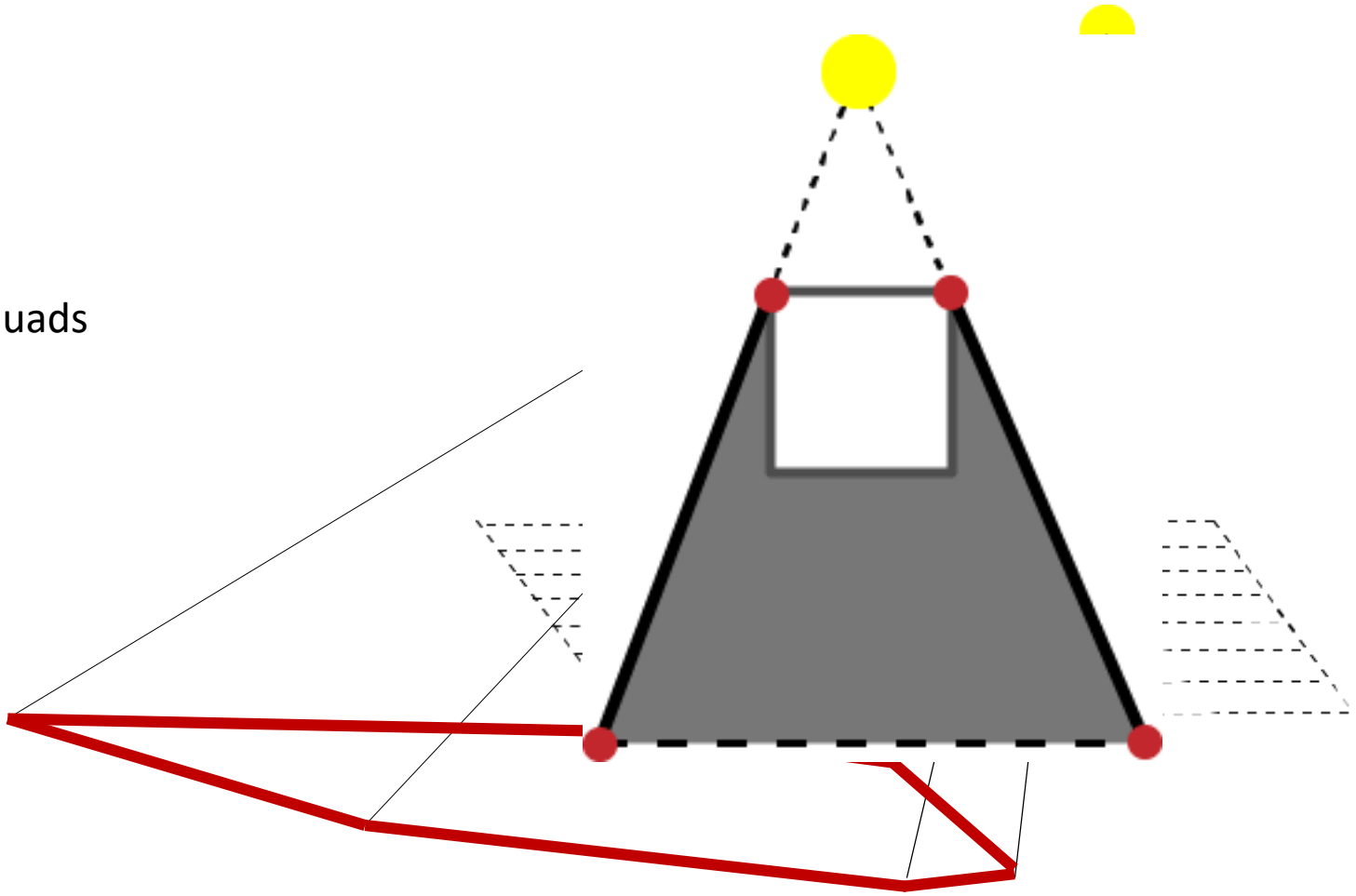

Shadow Volumes

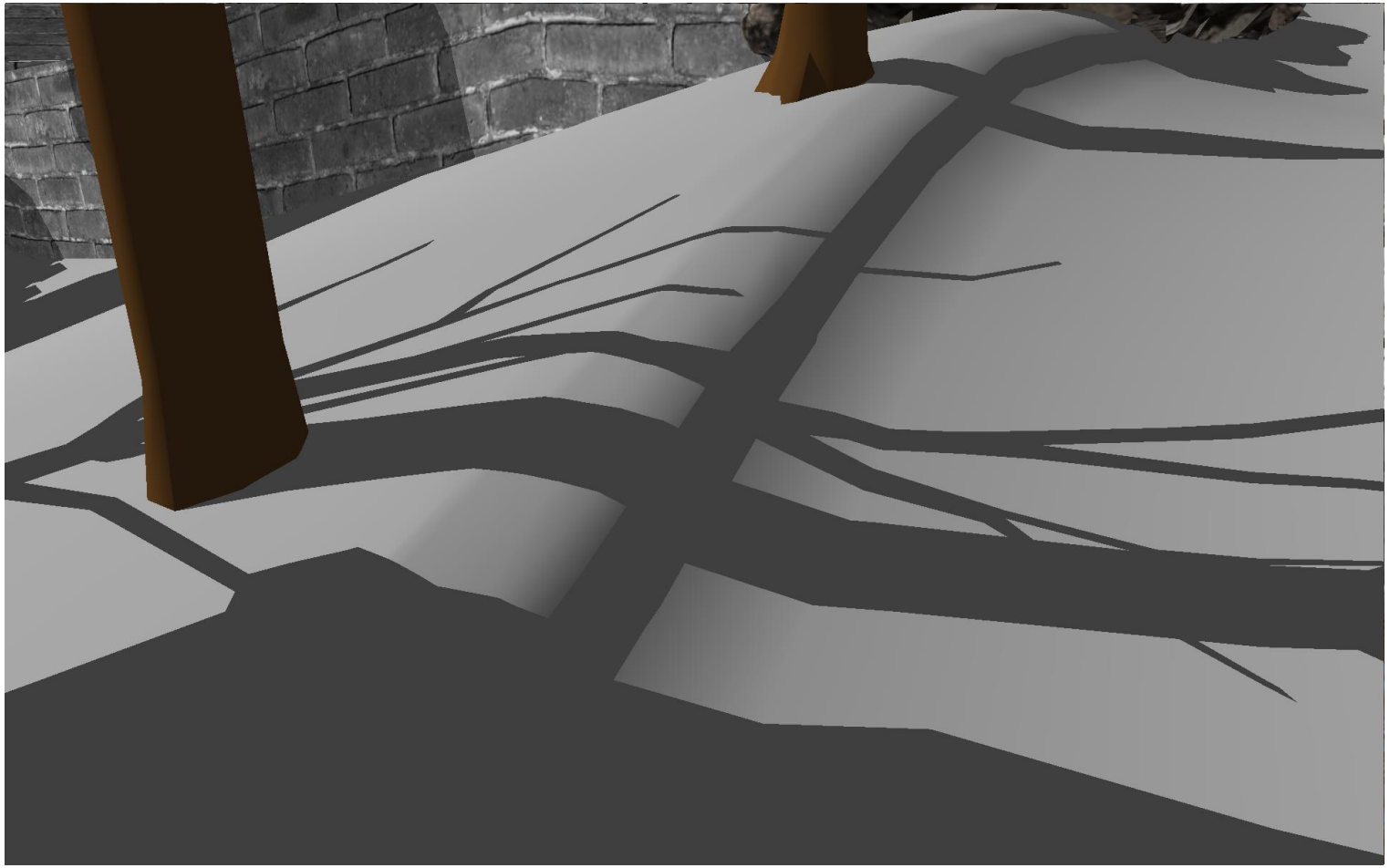

Hard Shadow Rendering

- Ray Tracing
  - [Appel 1968]

← Real time support is not widespread on current commodity hardware

- Irregular Z-Buffer
  - [Johnson et al. 2005]

← Inconsistent performance

- Shadow Volumes
  - [Crow 1977]

Shadow Volumes [Crow 1977]

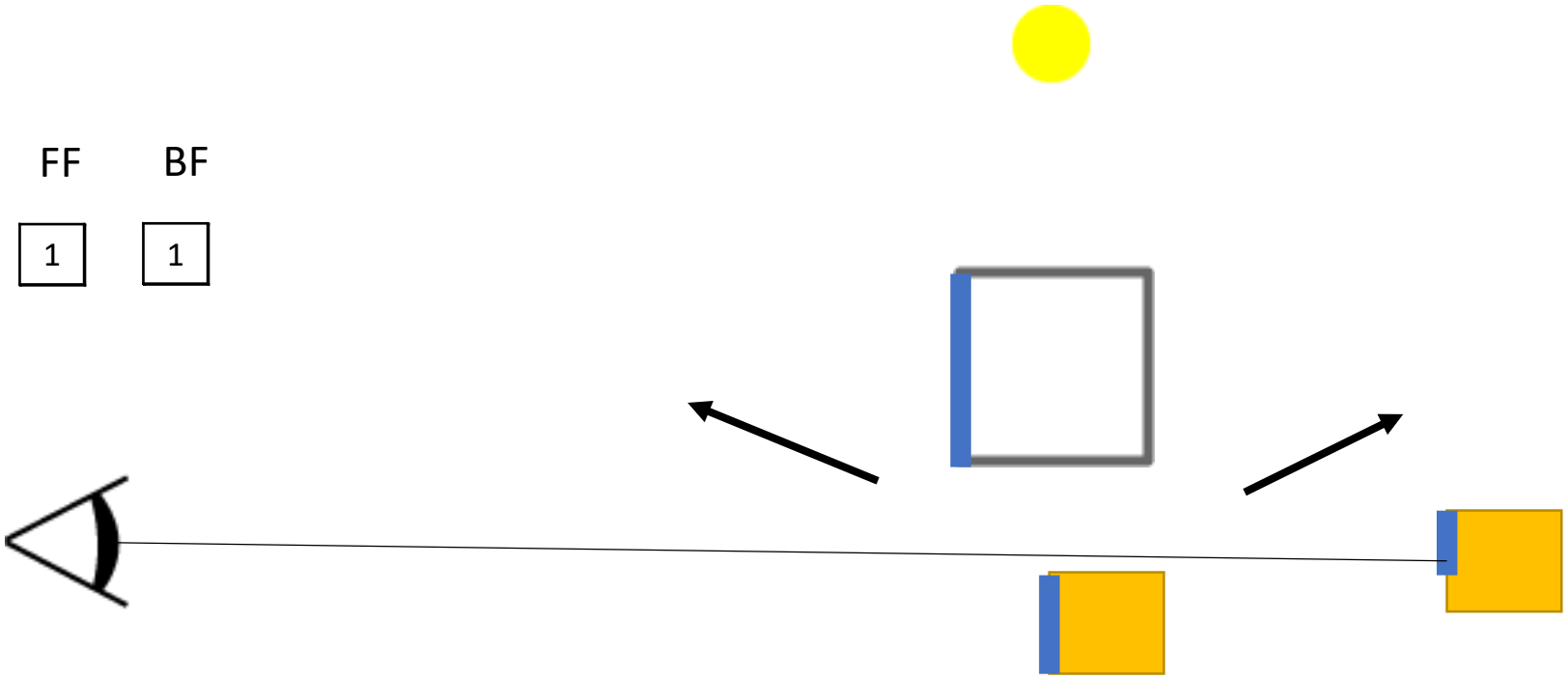

Shadow Volumes [Crow 1977]

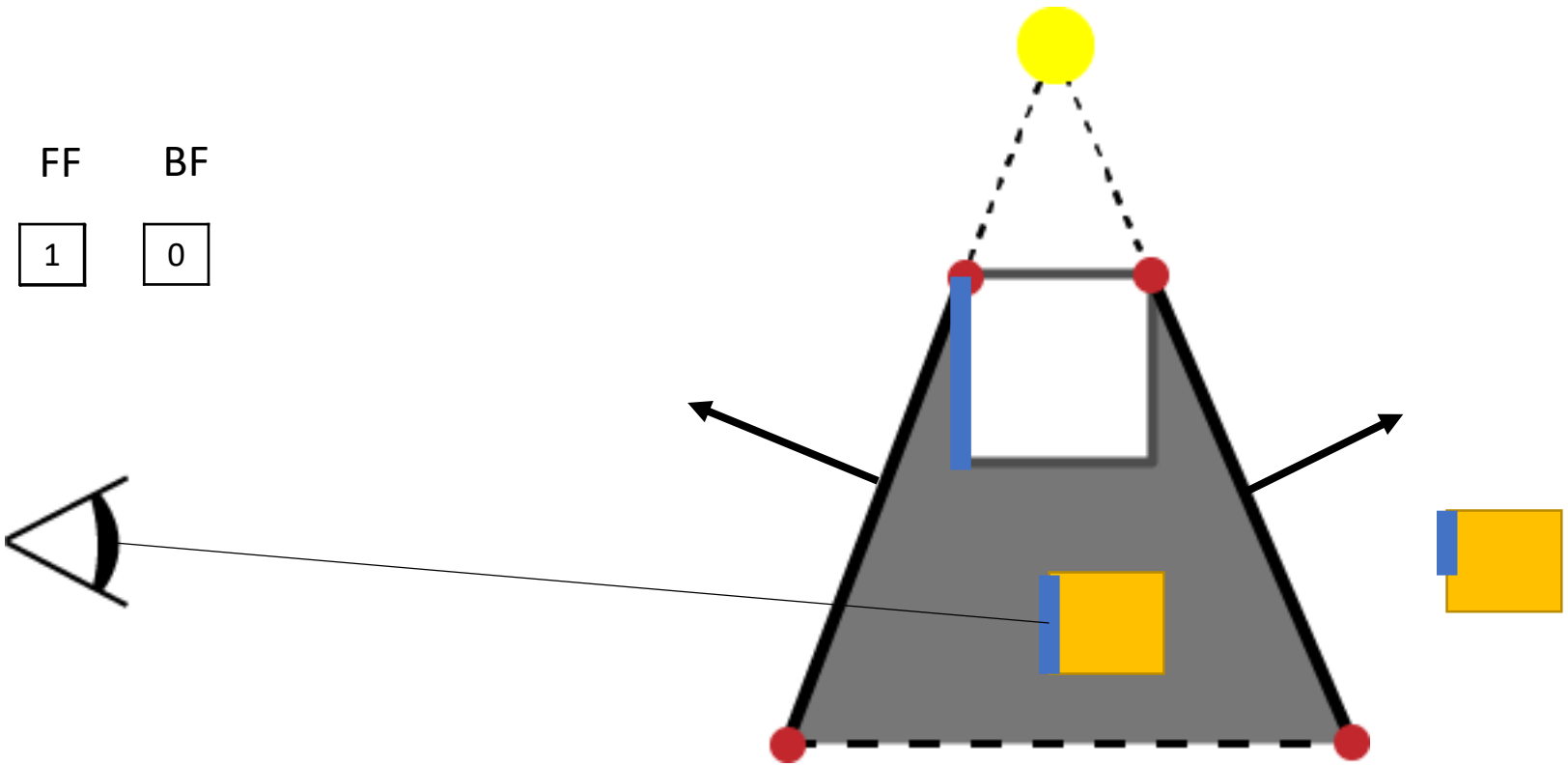

Z-Pass [Heidmann 1991]

1. Render Pass(Fill Depth Buffer)

2. Render Pass (Stencil)
   - Detect silhouette edges
   - Generate shadow volumes
   - Update stencil values
     with enabled depth test

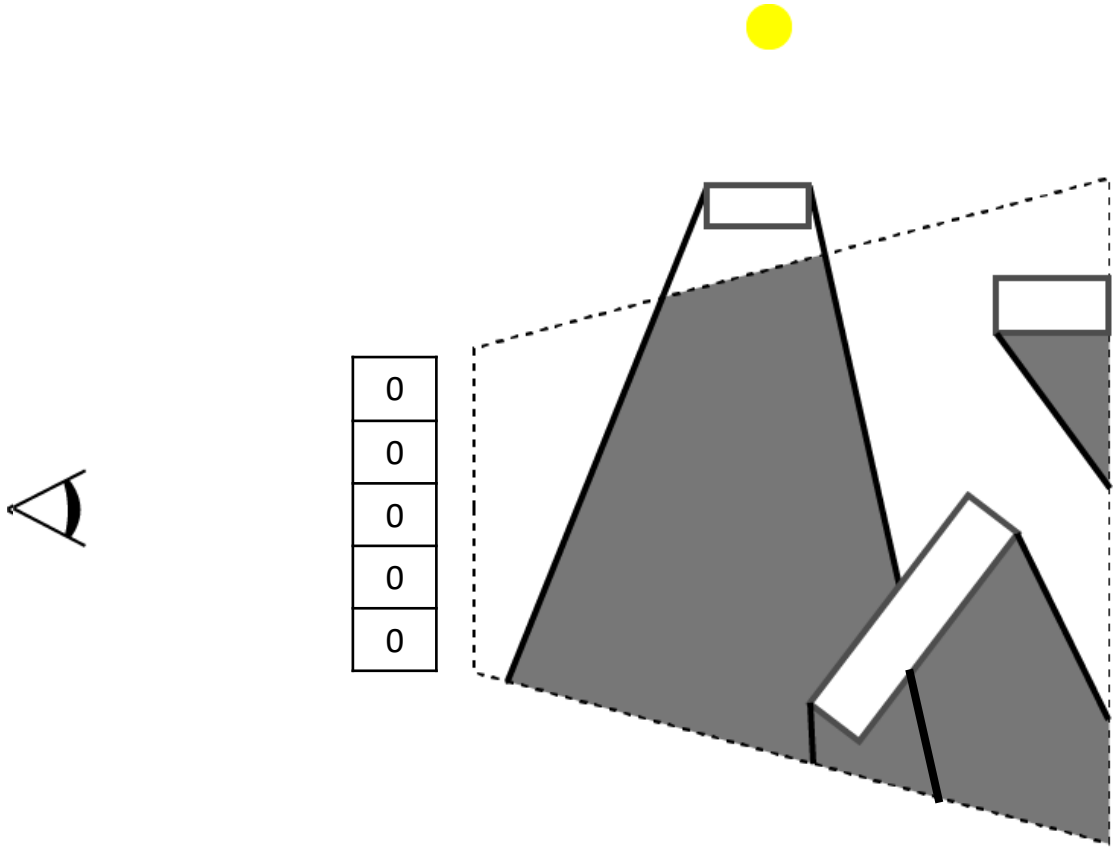

Z-Pass [Heidmann 1991]

1. Render Pass(Fill Depth Buffer)

2. Render Pass (Stencil)
   - Detect silhouette edges
   - Generate shadow volumes
   - Update stencil values
     with enabled depth test

3. Render Pass (Shading)
   - Pixels with stencil value 0 are lit

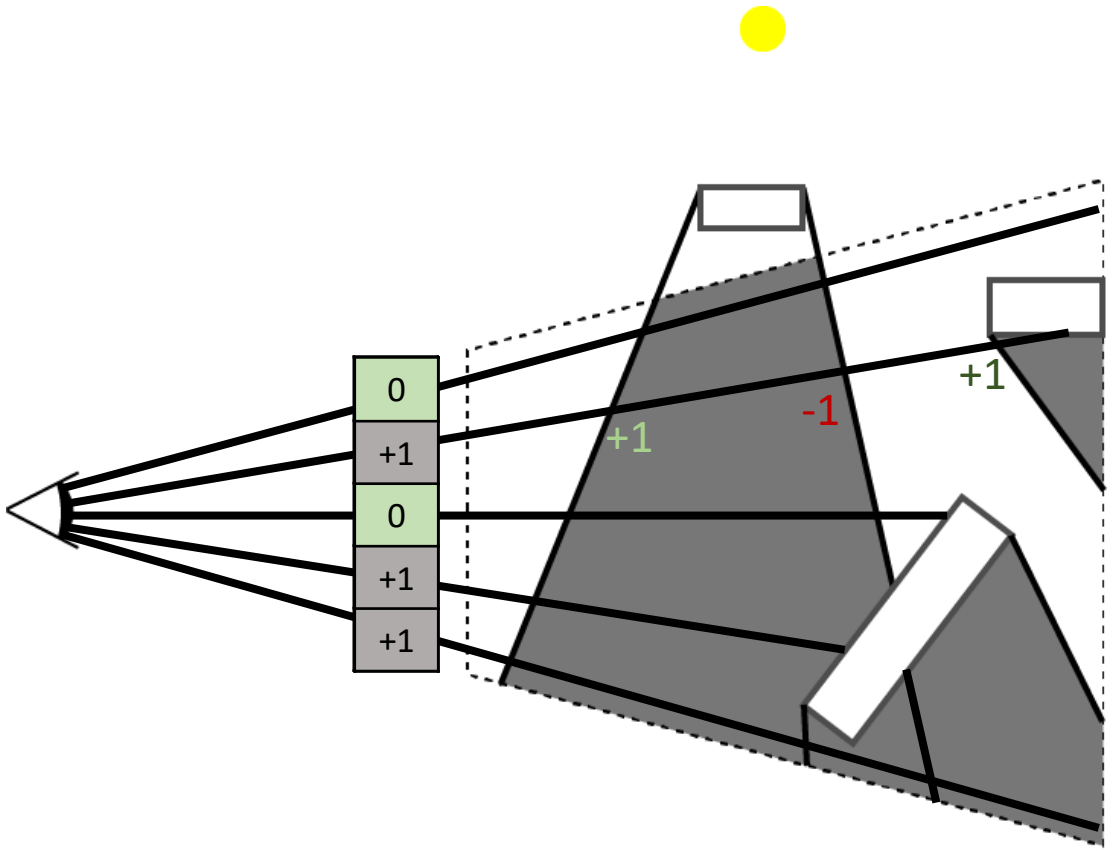

Z-Pass Limitation

- Remark
  - What if the light source is in shadow?

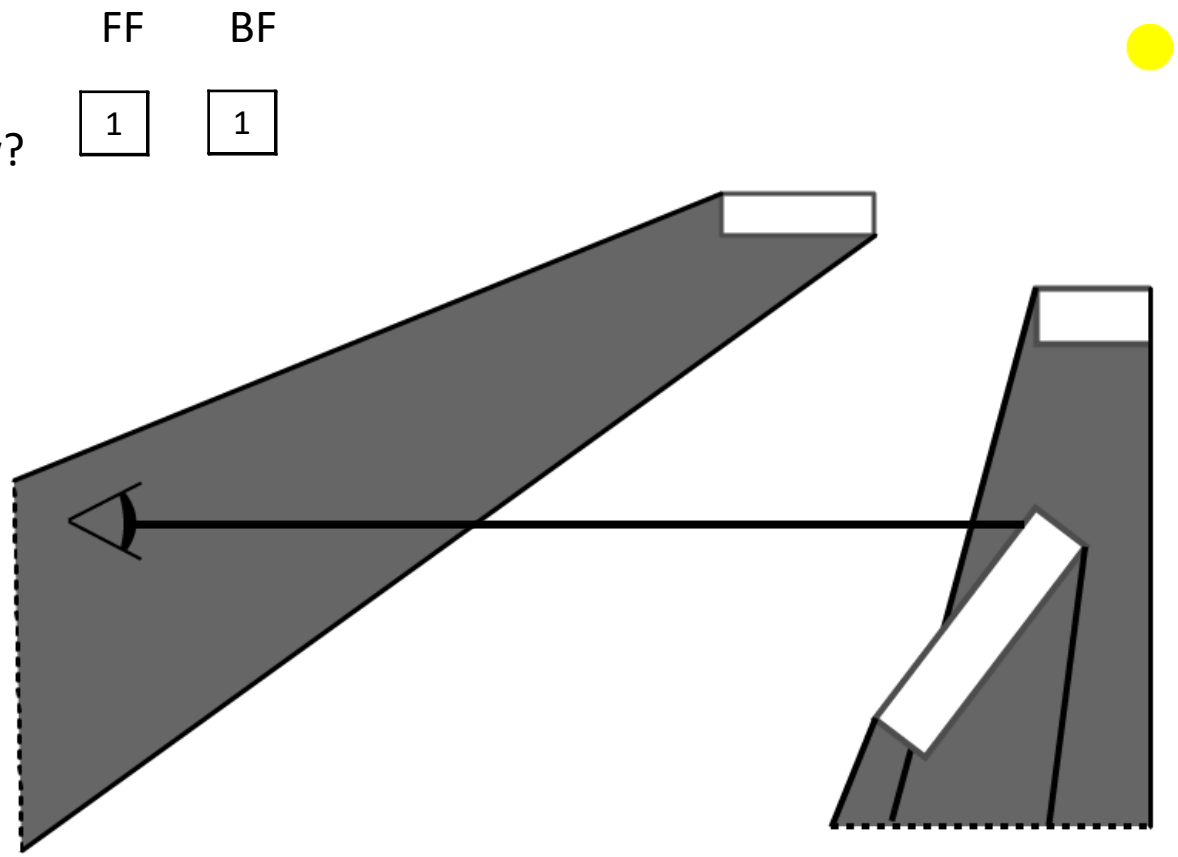

Z-Pass Limitation

- Remark
  - What if the light source is in shadow?
- Fail case for Z-Pass

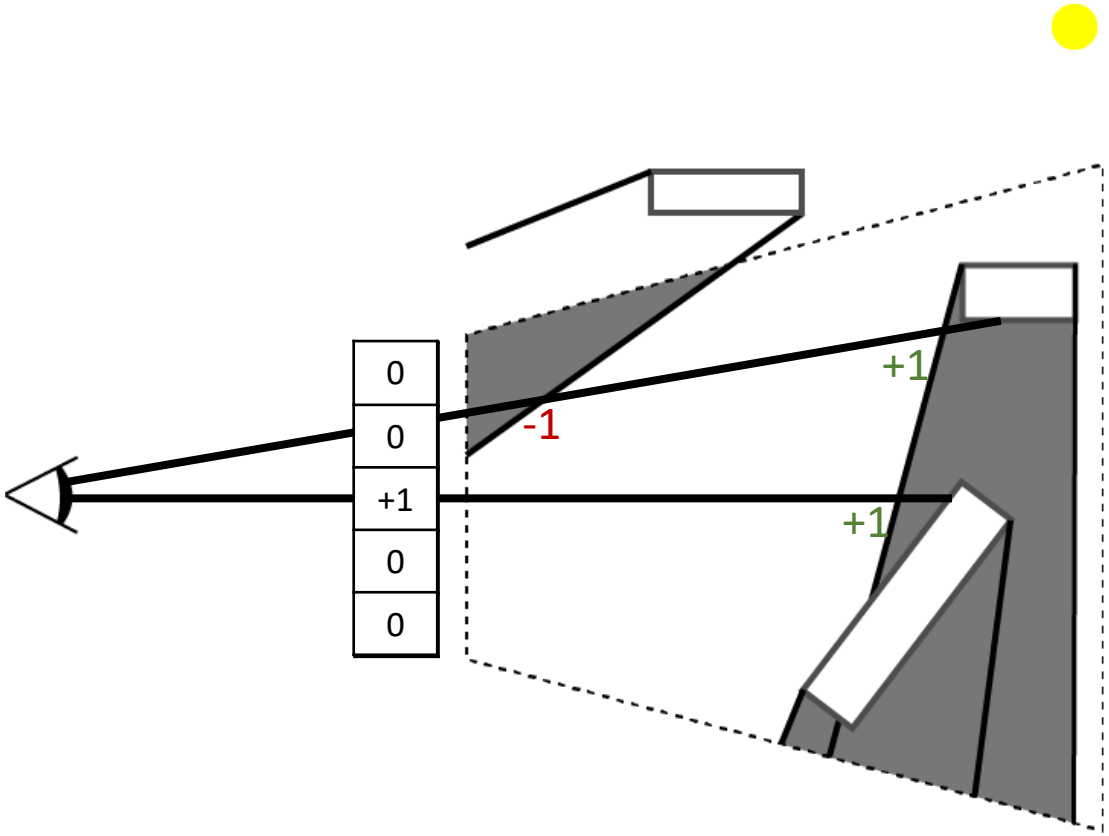

Z-Pass

Stencil Shadow Volumes

1. Render Pass(Fill Depth Buffer)

2. Render Pass (Stencil)
   - Detect silhouette edges
   - Generate shadow volumes
   - Update stencil values

3. Render Pass (Shading)
   - Pixels with stencil value 0 are lit

Z-Fail [Carmack 2000, Everitt & Kligard 2002]

- Cut shadow volumes against scene Bbox
- Create Caps
- We can count intersections to any point outside the Bbox

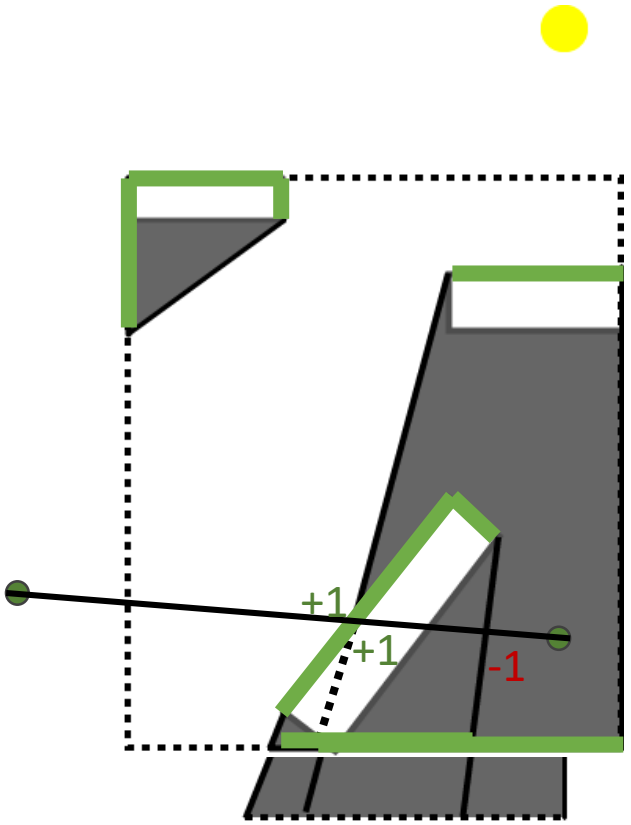

Z-Fail

- Depth Clamping

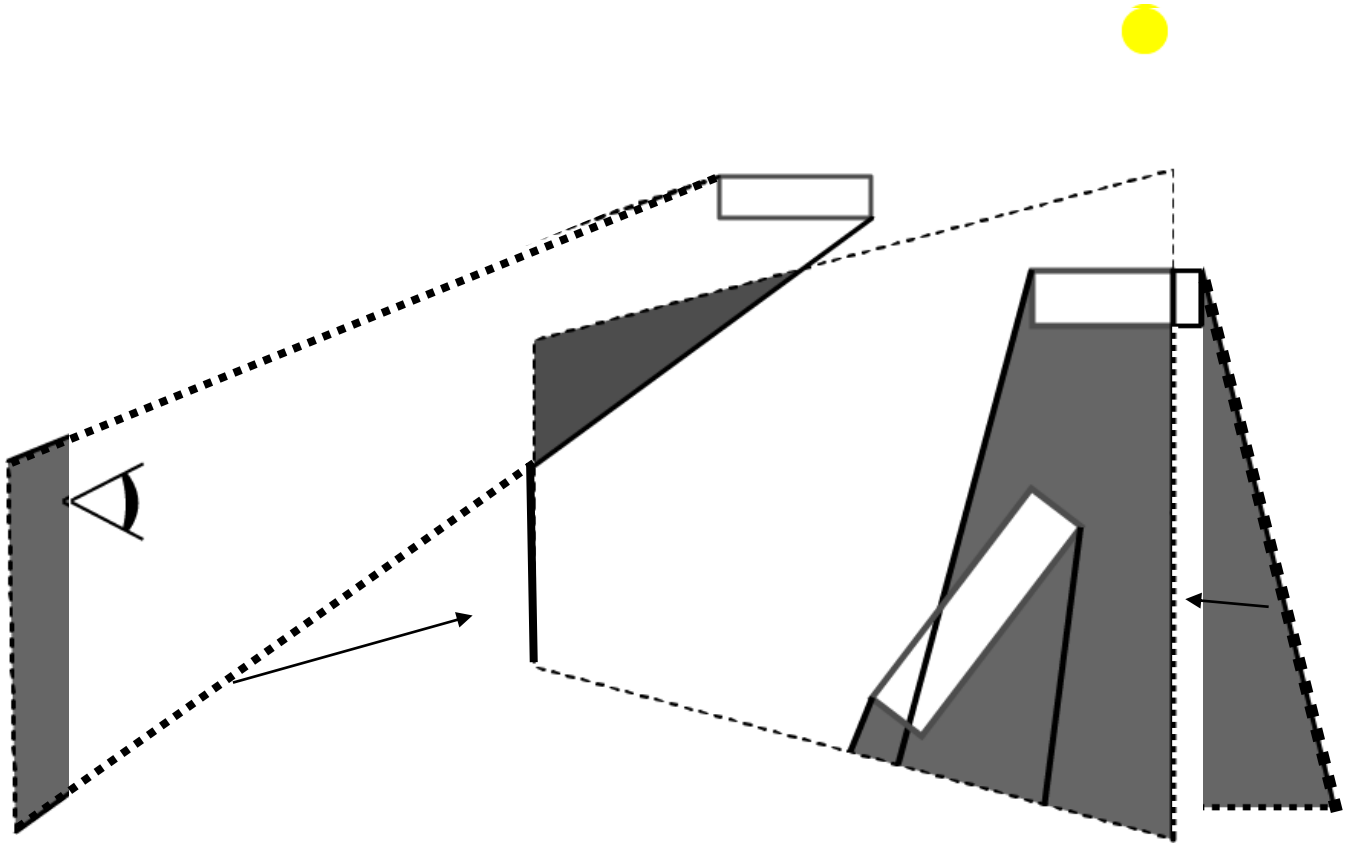

Z-Fail

- Can we count from any point?

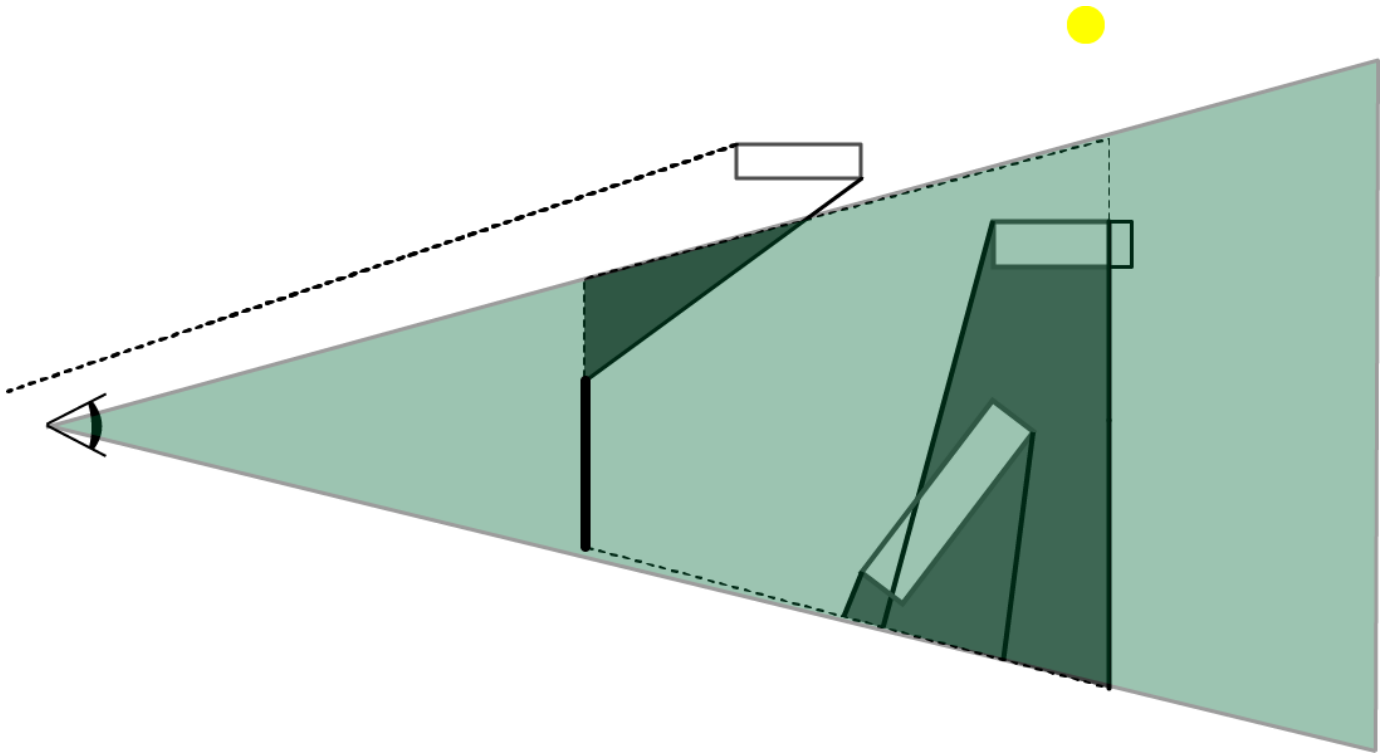

Z-Fail

- Pick a point behind the far plane
- Count the shadow quads between visible point and the picked point.
- In practice: enabling inverse depth test

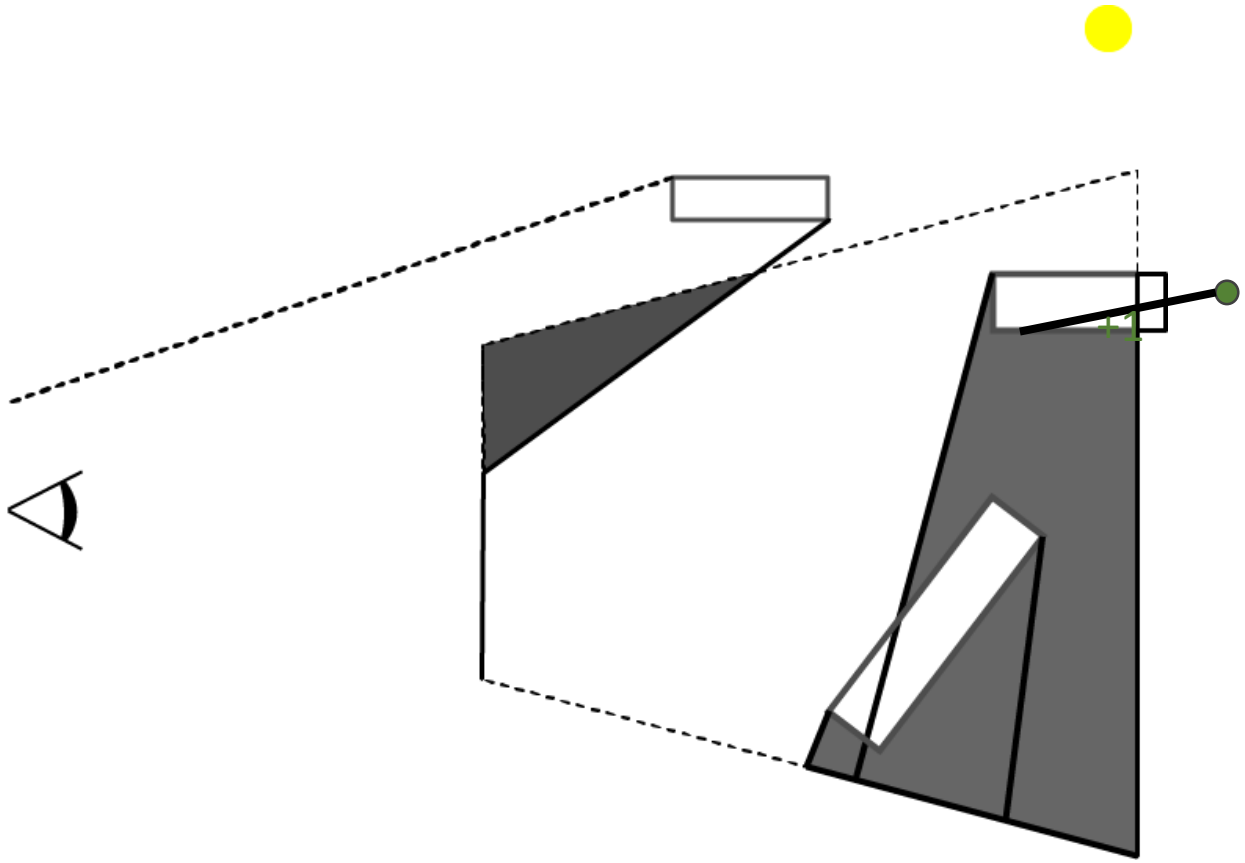

Z-Fail

1. Render Pass(Fill Depth Buffer)

2. Render Pass (Stencil) with depth clamp
   - Detect silhouette edges
   - Generate shadow volume
     - Render Front & Back Cap
   - Update stencil values
     - Enabled inverse depth test

3. Render Pass (Shading)
   - Pixels with stencil value 0 are lit

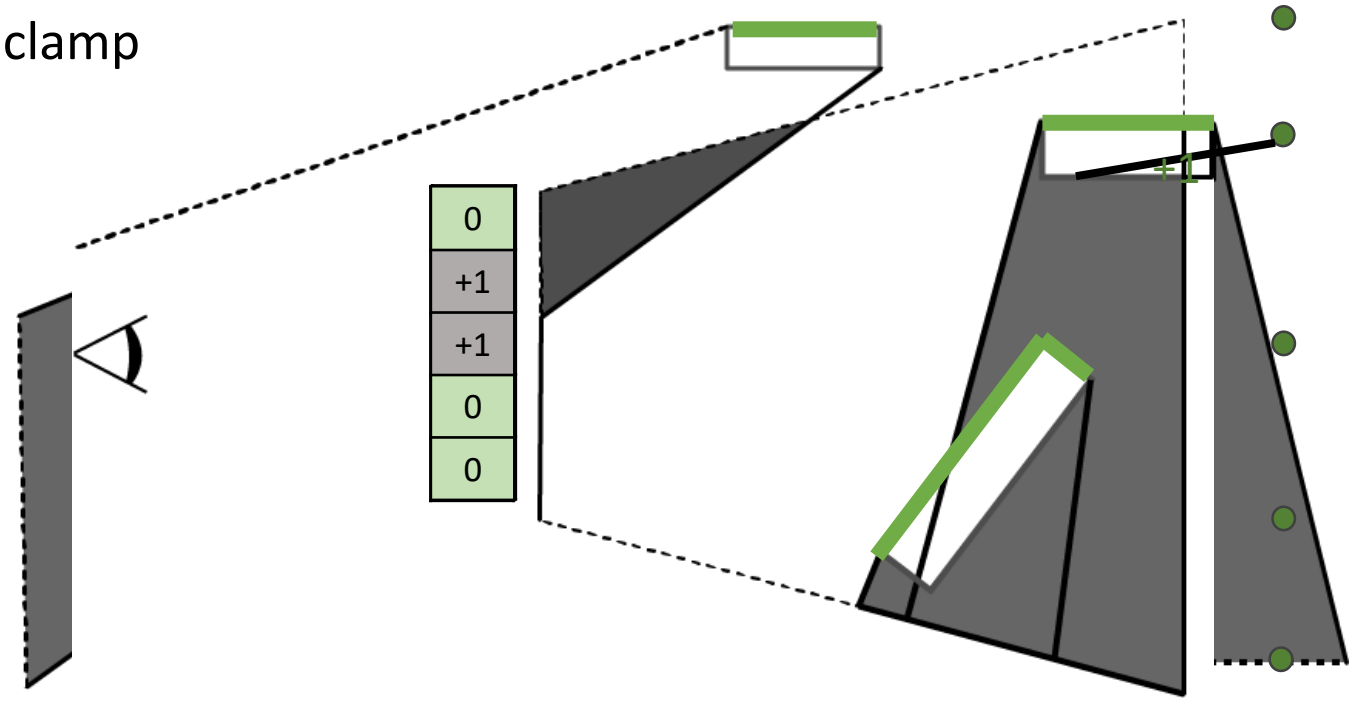

Z-Fail Limitations

1. Render Pass(Fill Depth Buffer)

2. Render Pass (Stencil) with depth clamp
   - Detect silhouette edges
   - Generate shadow volume
     - Render Front & Back Cap
   - Update stencil values
     - Enabled inverse depth test

Excessive overdraw

3. Render Pass (Shading)
   - Pixels with stencil value 0 are lit

ZP+ [Hornus et al. 2005]

1. Z-Pass shadow calculation
2. Render Pass (from light source)
   - Light source to near plane
   - Update all the stencil values

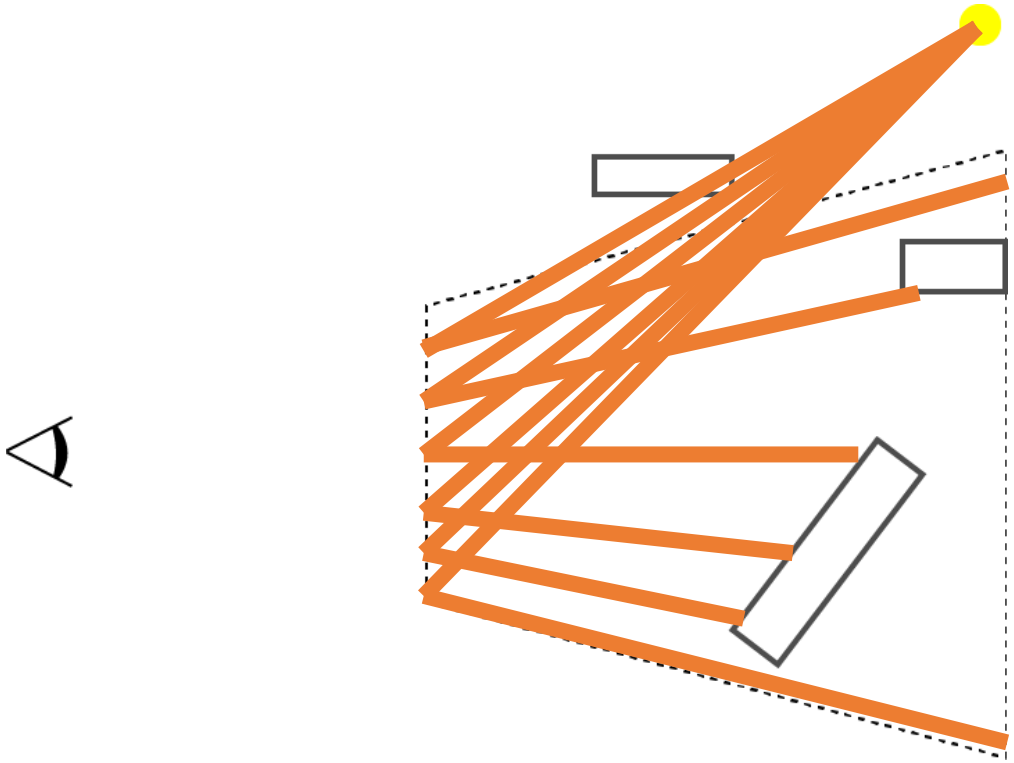

ZP+ [Hornus et al. 2005]

1. Render Pass(Fill Depth Buffer)
2. Render Pass (Stencil)
   a. From light source to near plane
      - Update stencil values
   b. From camera to scene
      - Detect silhouette edges
      - Generate shadow volumes
      - Update stencil values with enabled depth test
3. Render Pass (Shading)
   - Shade the pixels with 0 stencil

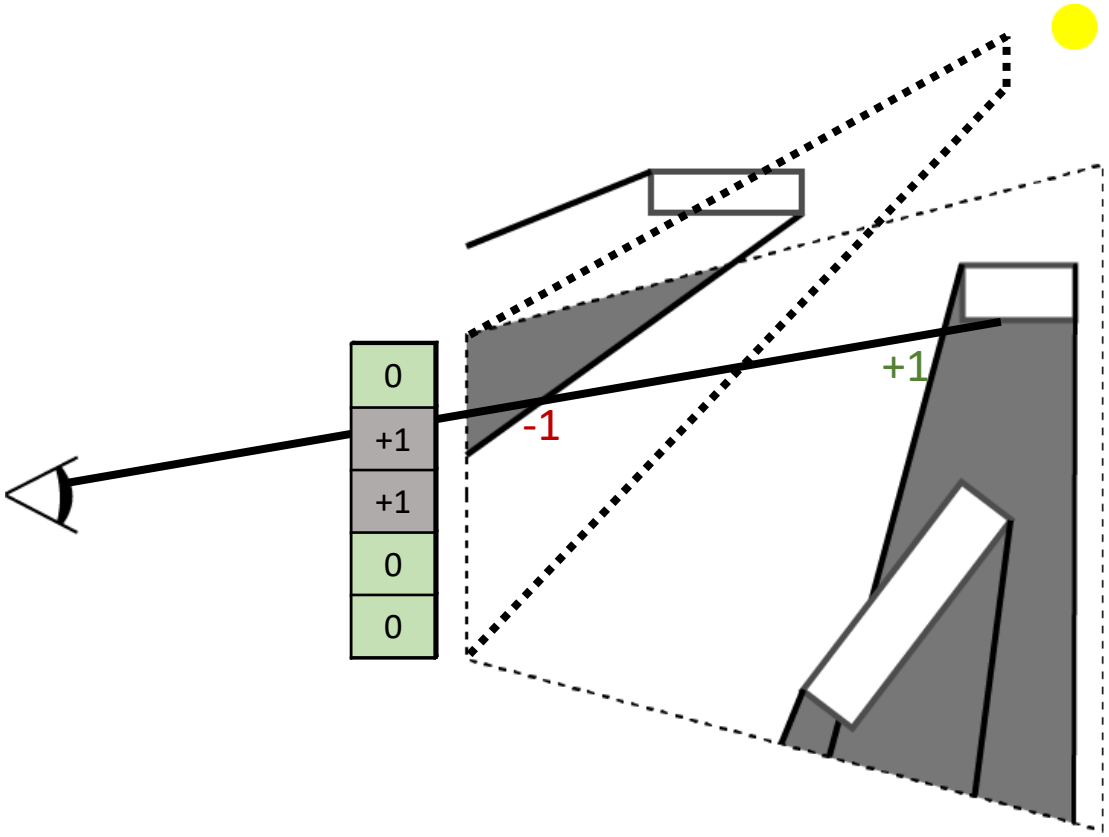

ZP+ Limitations

1. Render Pass(Fill Depth Buffer)
2. Render Pass (Stencil)
   a. From light source to near plane
      - Update stencil values

   Full screen size draw

   b. From camera to scene
      - Detect silhouette edges
      - Generate shadow volumes
      - Update stencil values with enabled depth test

   Implementation Complexity

3. Render Pass (Shading)
   - Shade the pixels with 0 stencil

++ZP [Eisemann et al. 2011]

1. Standard Z-Pass
2. Render Pass
   - Light source to camera
   - 1 pixel sized target
3. Depth Clamp

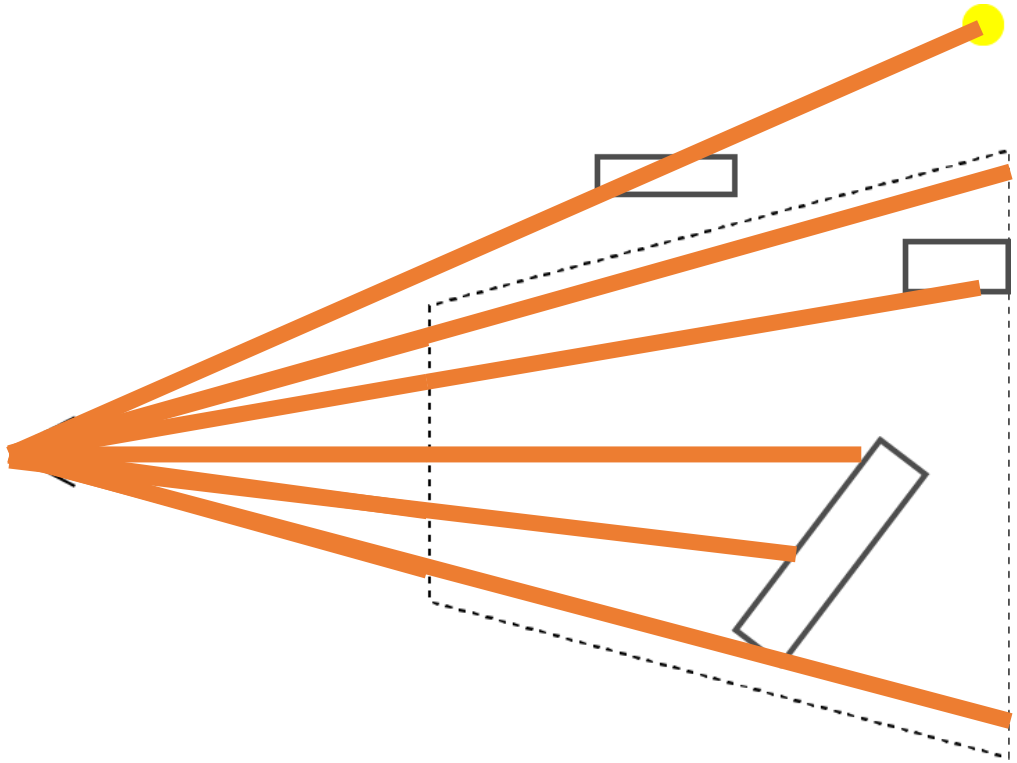

++ZP

1. Render Pass (Depth)
2. Render Pass (Stencil)
   a. From light source to camera
      - 1 pixel render target
   b. From camera to scene (Z-Pass w/ depth clamping)
      - Detect silhouette edges
      - Generate shadow volumes
      - Update stencil values with enabled depth test
3. Render Pass (Shading)
   - Shade the pixels with 0 stencil

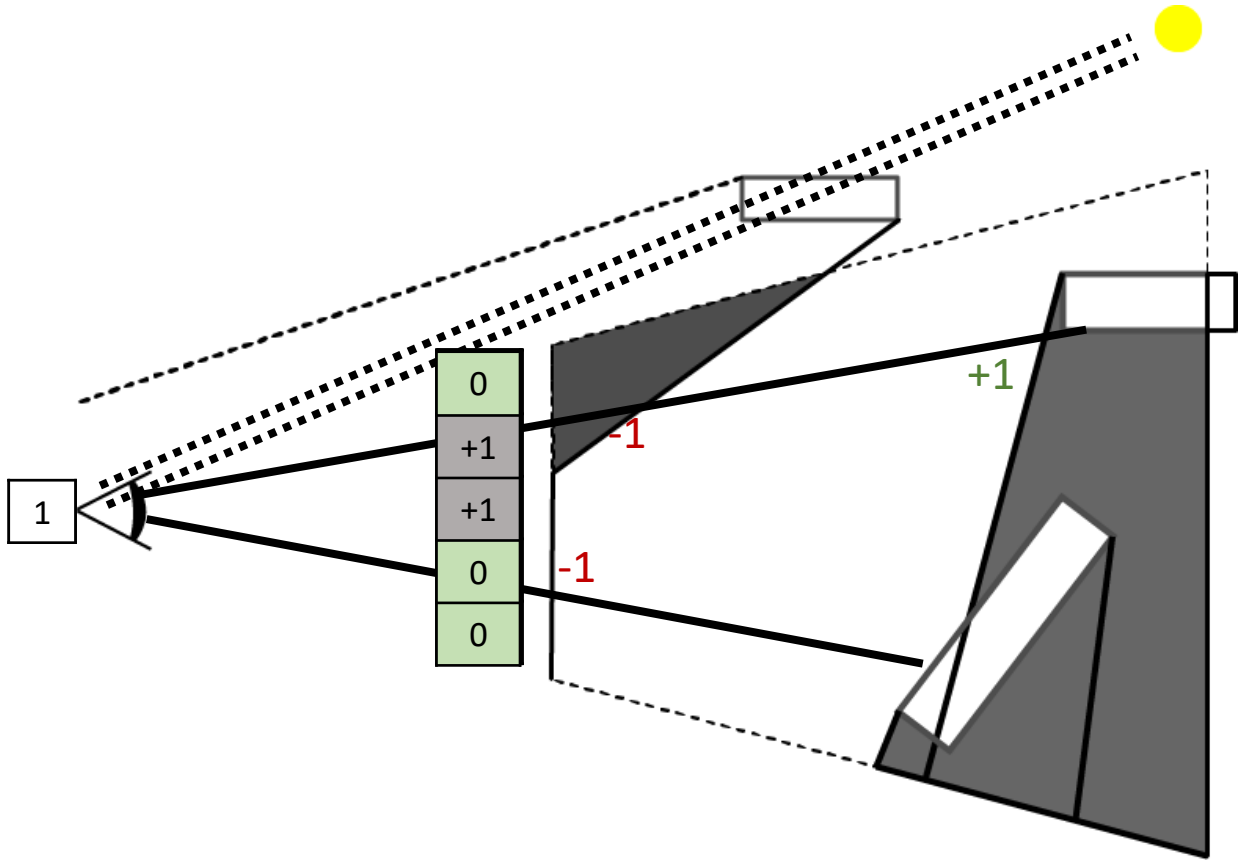

++ZP Limitations

1. Render Pass (Depth)

Draw call for the whole scene

2. Render Pass (Stencil)
   a. From light source to camera
      - 1 pixel render target
   b. From camera to scene
      (Z-Pass w/ depth clamping)

Our approach combines these two passes

3. Render Pass (Shading)
   - Shade the pixels with 0 stencil

Our Method

Atomic ZP

1. Render Pass (Depth)
2. Render Pass (Stencil) with depth clamp
   - Test triangle intersection with ray from light to camera and whether front facing
     - Increment the atomic counter
   - Detect silhouette edges
   - Generate shadow volumes
   - Update stencil values with enabled depth test
- Render Pass (Shading)
  - If stencil value plus the atomic counter equals 0 the point is lit

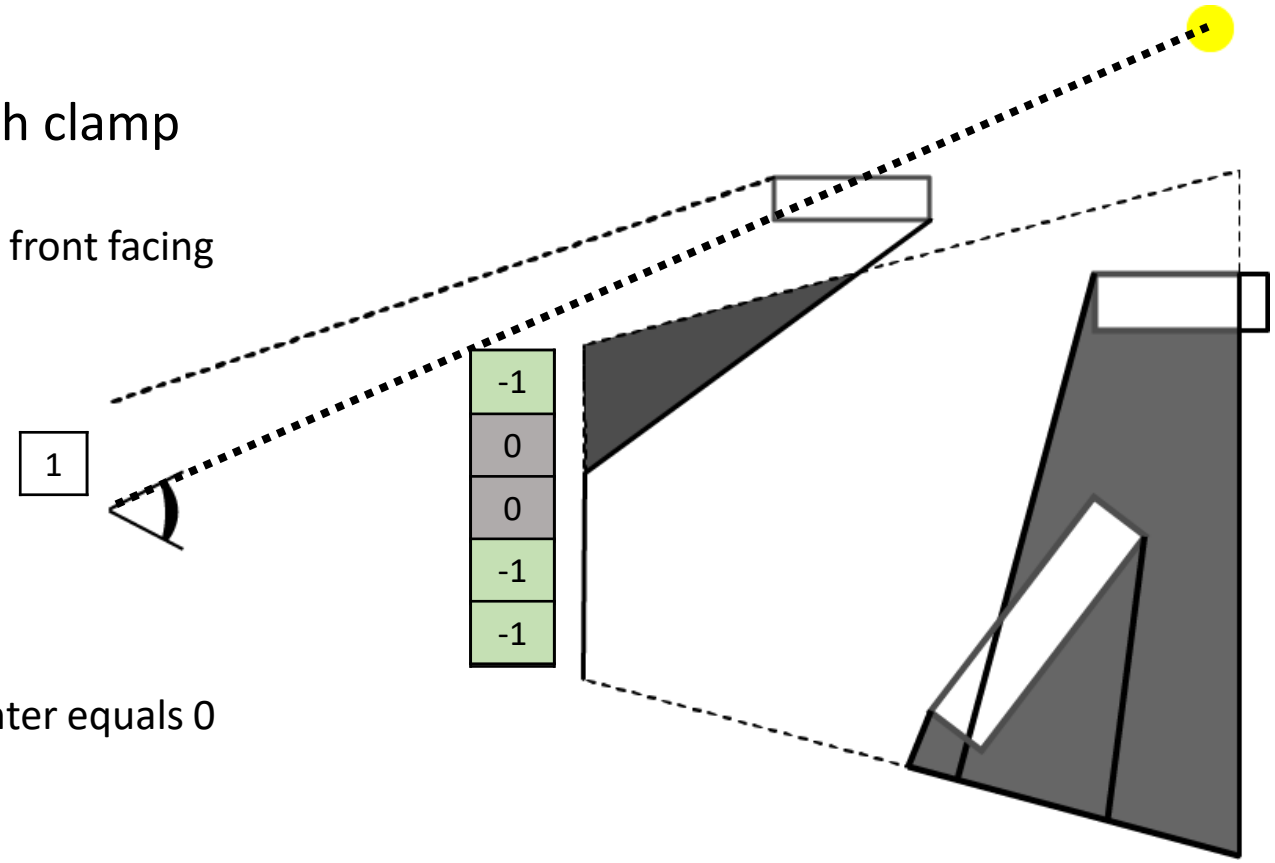

Results

1. Render Pass (Fill Depth Buffer)

2. Render Pass (Stencil)
   a. From Light to * (ZP+ & ++ZP)
   b. From camera to scene
      - Detect silhouette edges
      - Render shadow quads
      - Update stencil values

3. Render Pass (Shading)

Results

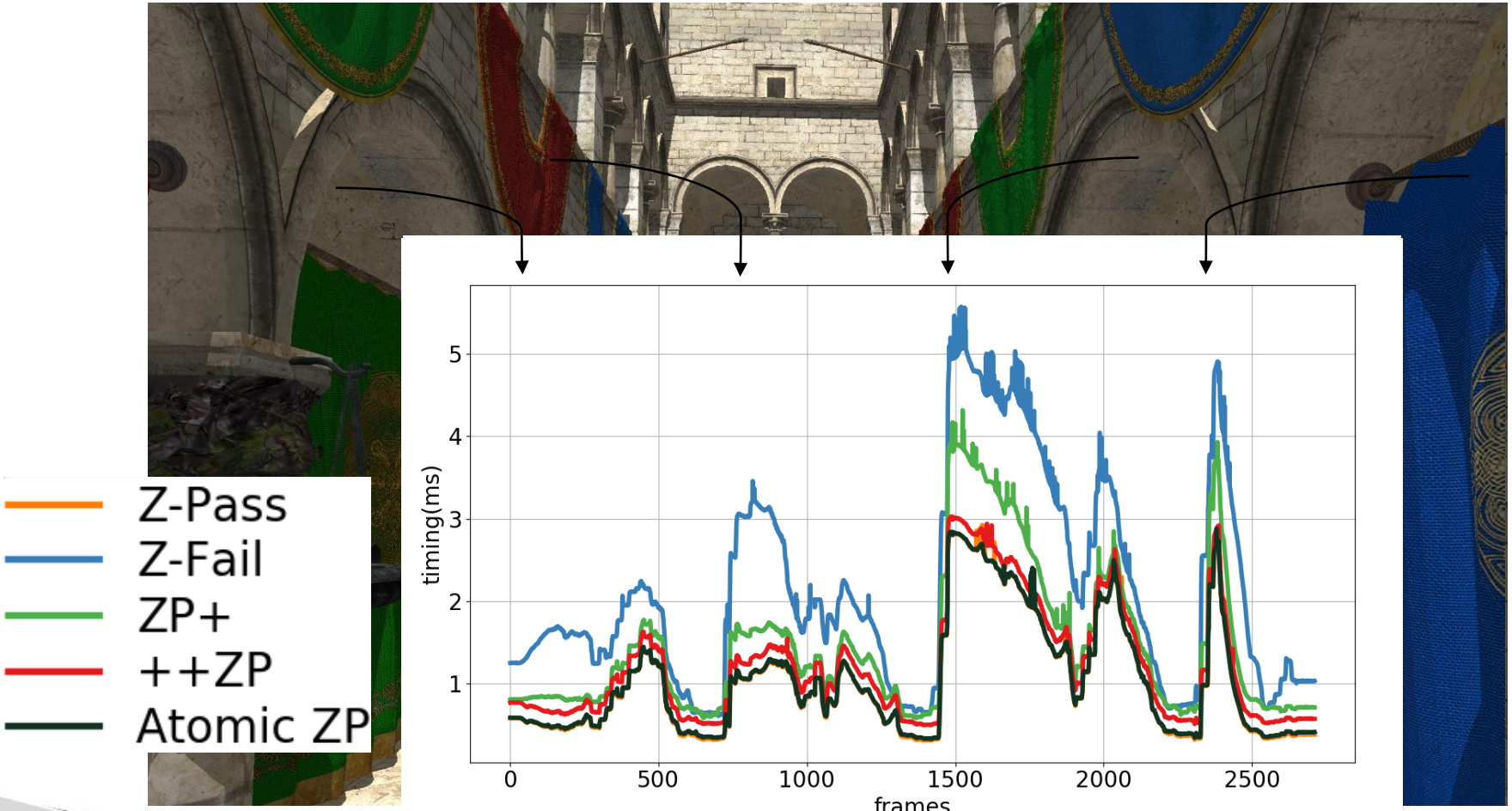
Z-Pass
Z-Fail
ZP+
++ZP
Atomic ZP
timing(ms)
5
4
3
2
1
0
500
1000
1500
2000
2500
frames

Results

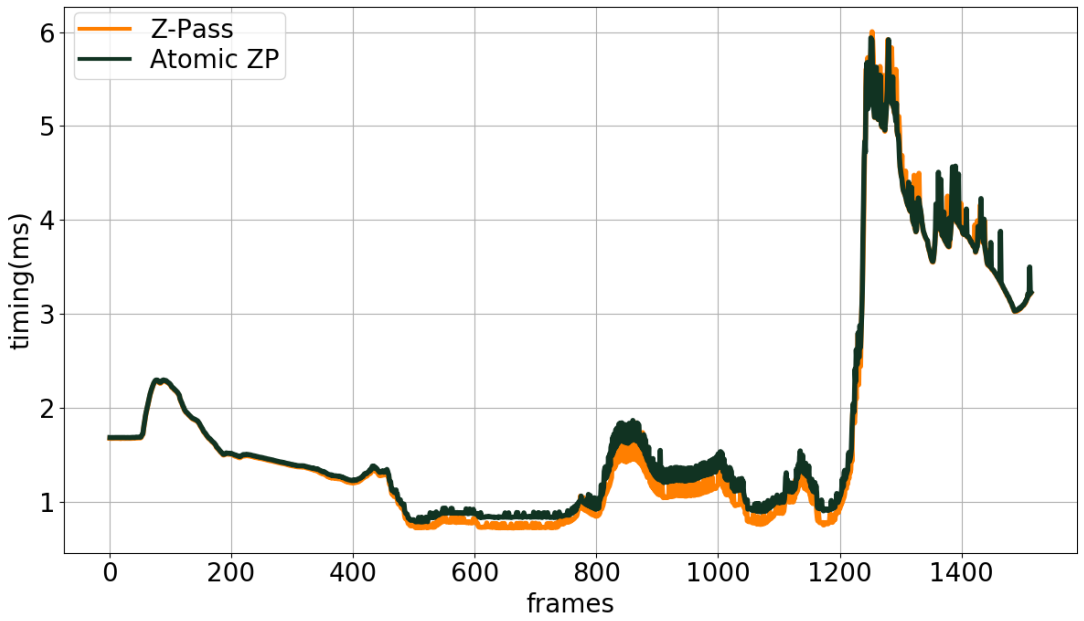

Citadel

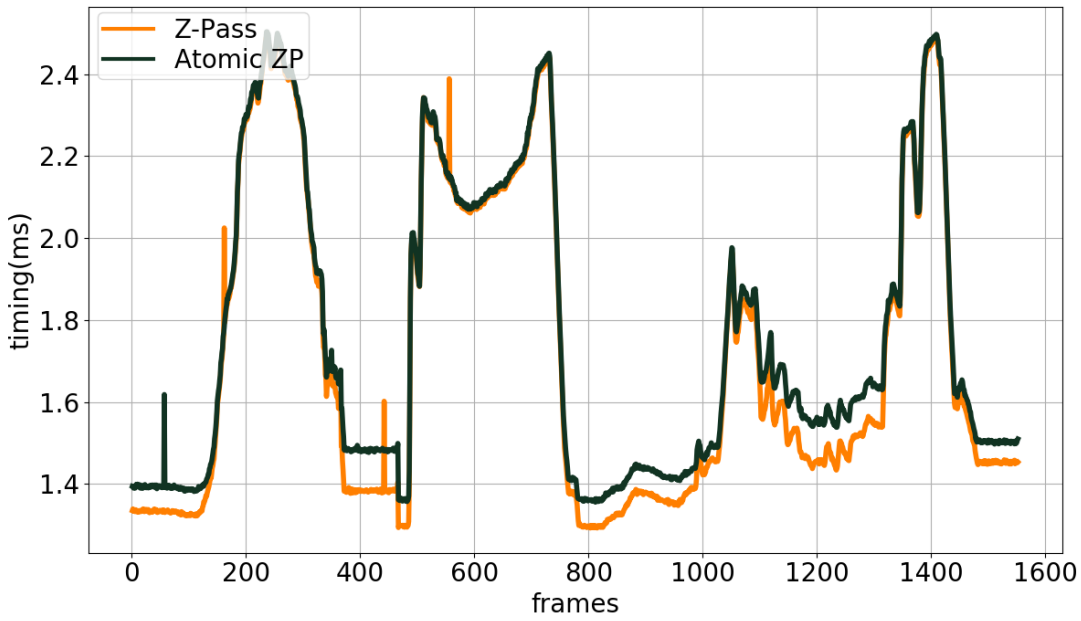

Buddha

Conclusion

- Easy to implement, artifact free
- Avoids additional Render Pass (ZP+ & ++ZP)
- Avoids Rendering Hidden Geometry and Caps (Z-Fail)
- Performs on par with Z-Pass
  - 1 ray cast per light facing triangle overhead

A Practical and Efficient Approach for Correct Z-Pass Stencil Shadow Volume

http://graphics.tudelft.nl

Baran Usta — b.usta@tudelft.nl

Leonardo Scandolo — l.scandolo@tudelft.nl

Markus Billeter — m.billeter@tudelft.n

Ricardo Marroquim — r.marroquim@tudelft.n

Elmar Eisemann — e.eisemann@tudelft.n

Questions?

This work was supported by DyViTo that is funded by the European Union's Horizon 2020 programme under grant agreement No 765121 and partially funnded by Swiss National Science Foundation Advanced Postdoc Mobility Project 174321.